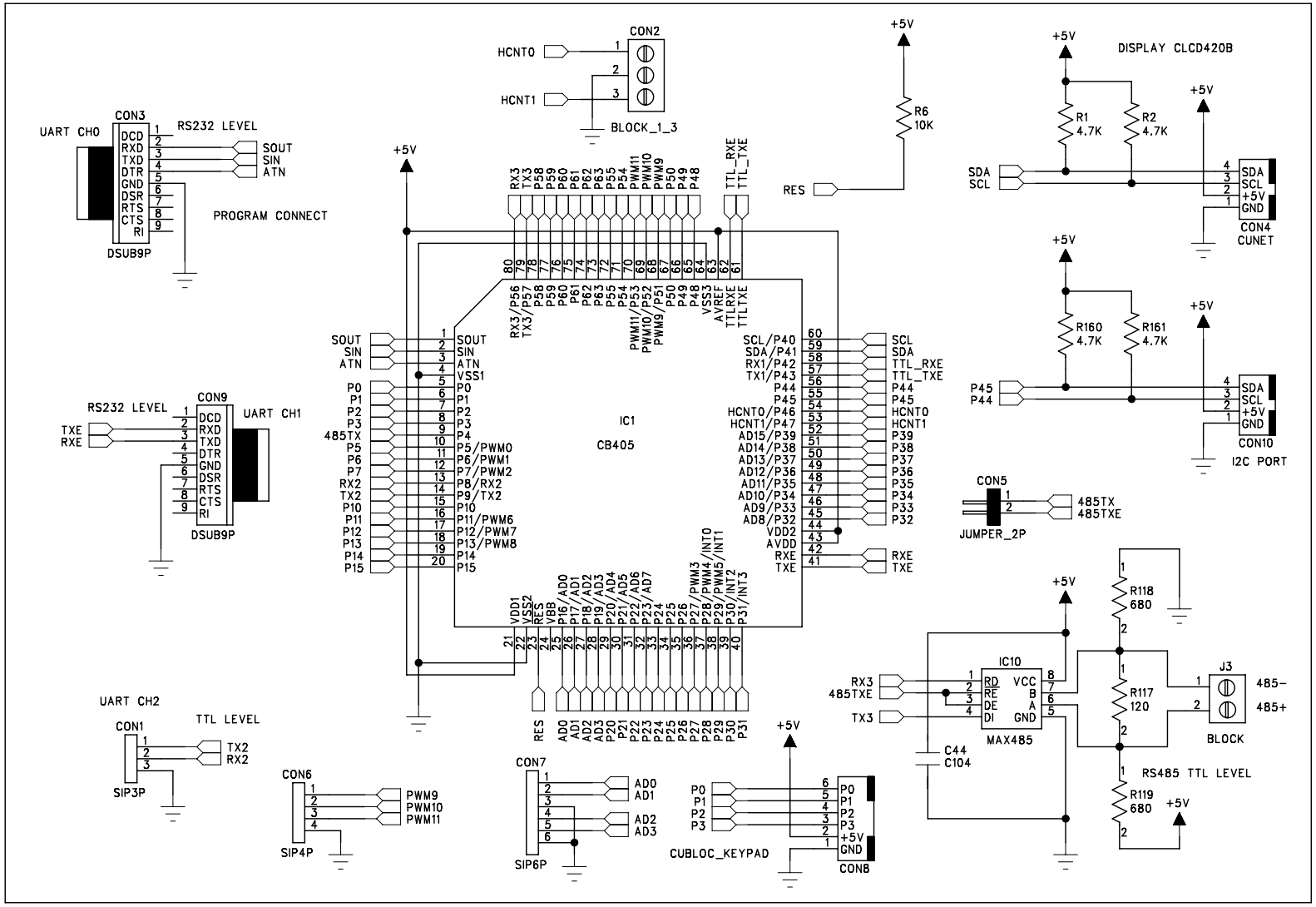
CON2
HCNT0
HCNT1
BLOCK_1_3
+5V
R6
10K
RES
DISPLAY CLCD420B
R1
4.7K
R2
4.7K
SDA
SCL
CON4
CUNET
R160
4.7K
R161
4.7K
P45
P44
CON10
I2C PORT
CON3
UART CH0
RS232 LEVEL
SOUT
SIN
ATN
PROGRAM CONNECT
DSUB9P
CON9
UART CH1
TXE
RXE
IC1
CB405
CON5
JUMPER_2P
485TX
485TXE
IC10
MAX485
RX3
TX3
C44
C104
R118
680
R117
120
R119
680
J3
BLOCK
485-
485+
RS485 TTL LEVEL
UART CH2
CON1
TTL LEVEL
TX2
RX2
SIP3P
CON6
PWM9
PWM10
PWM11
SIP4P
CON7
AD0
AD1
AD2
AD3
SIP6P
CUBLOC_KEYPAD
CON8

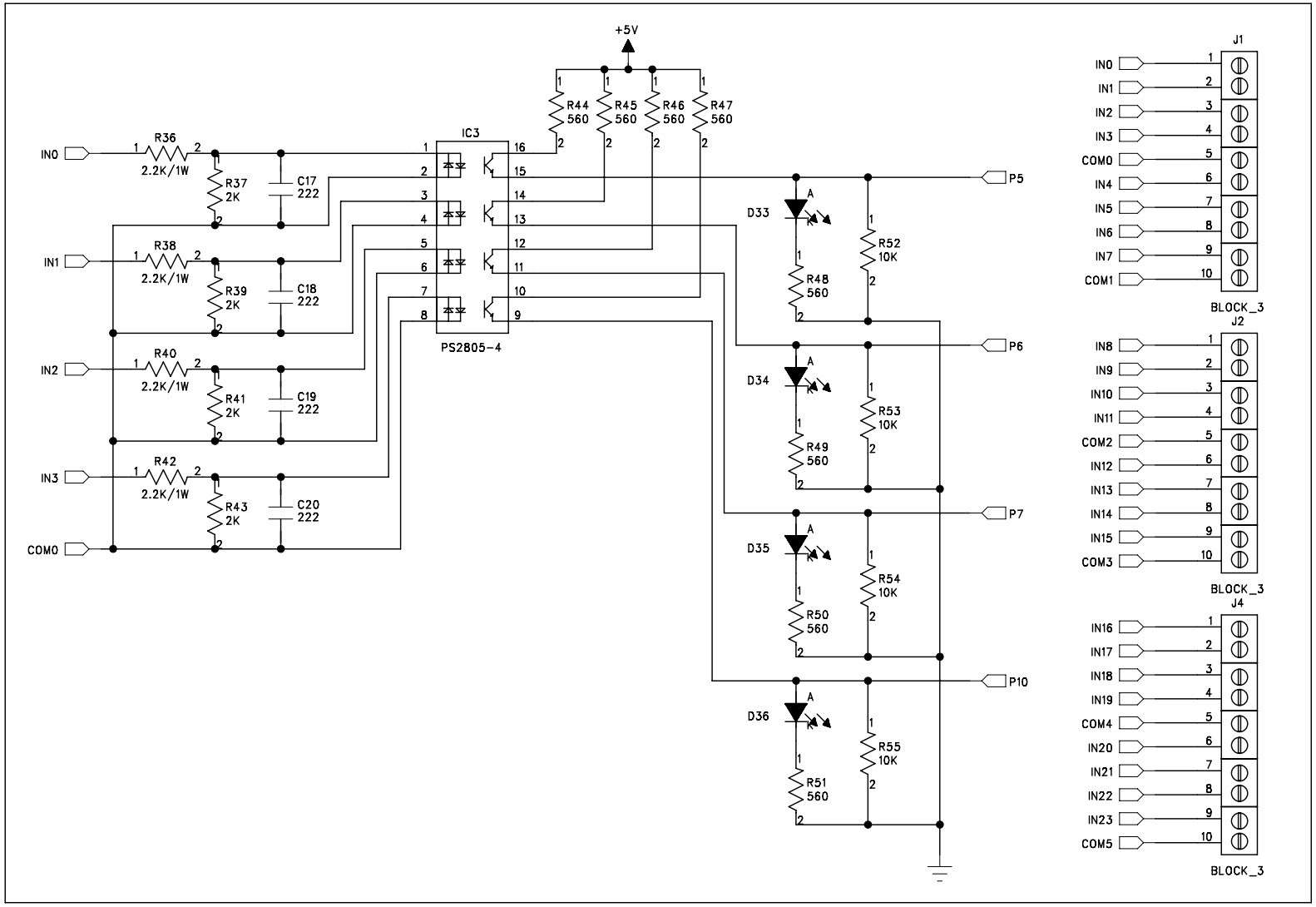
+5V
IN0
IN1
IN2
IN3
COM0
R36
2.2K/1W
R37
2K
C17
222
R38
2.2K/1W
R39
2K
C18
222
R40
2.2K/1W
R41
2K
C19
222
R42
2.2K/1W
R43
2K
C20
222
IC3
PS2805-4
R44
560
R45
560
R46
560
R47
560
D33
D34
D35
D36
R48
560
R49
560
R50
560
R51
560
R52
10K
R53
10K
R54
10K
R55
10K
P5
P6
P7
P10
J1
IN0
IN1
IN2
IN3
COM0
IN4
IN5
IN6
IN7
COM1
BLOCK_3
J2
IN8
IN9
IN10
IN11
COM2
IN12
IN13
IN14
IN15
COM3
BLOCK_3
J4
IN16
IN17
IN18
IN19
COM4
IN20
IN21
IN22
IN23
COM5
BLOCK_3

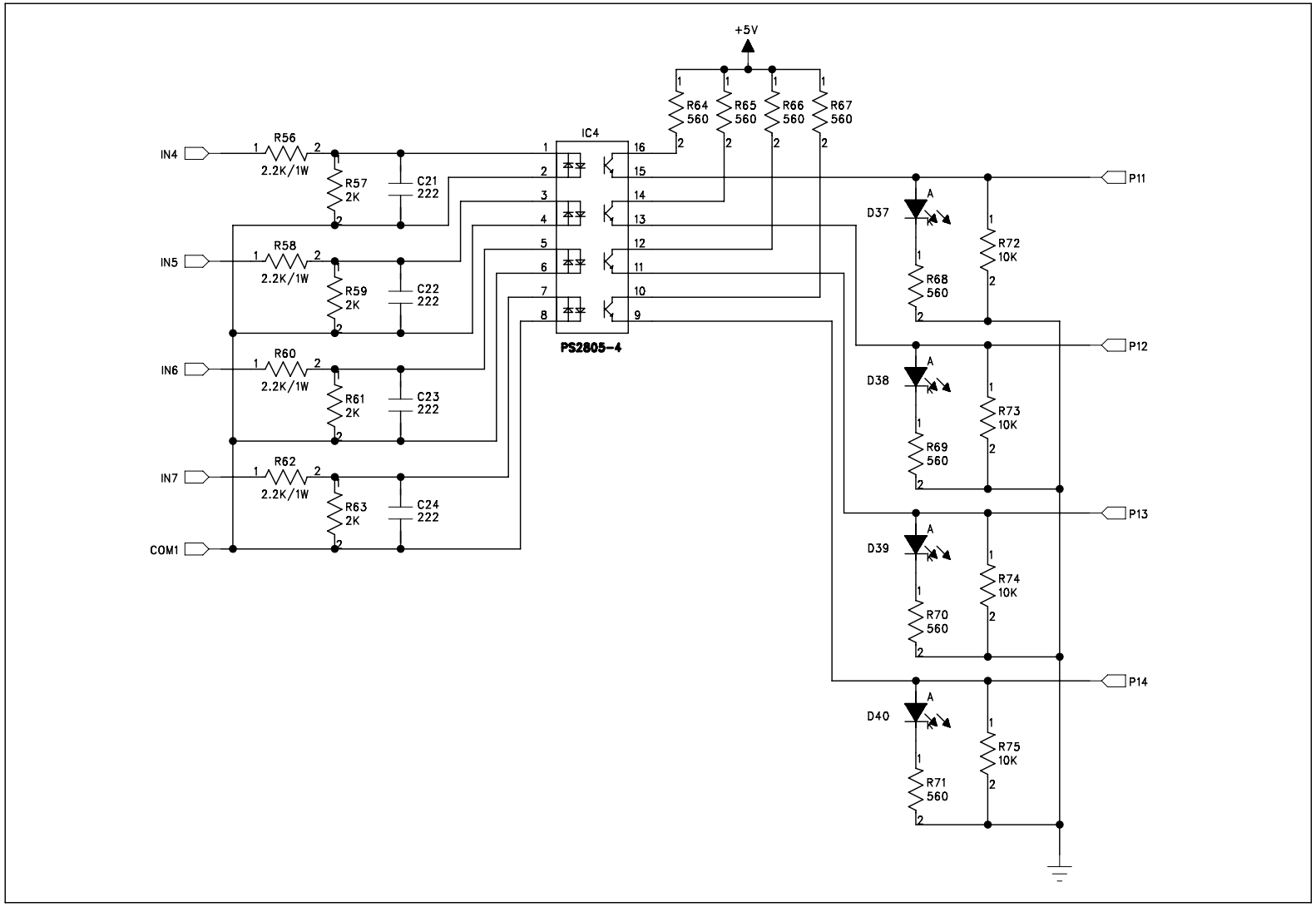
+5V
IC4
PS2805-4
IN4
IN5
IN6
IN7
COM1
R56
2.2K/1W
R57
2K
C21
222
R58
2.2K/1W
R59
2K
C22
222
R60
2.2K/1W
R61
2K
C23
222
R62
2.2K/1W
R63
2K
C24
222
R64
560
R65
560
R66
560
R67
560
D37
D38
D39
D40
R68
560
R69
560
R70
560
R71
560
R72
10K
R73
10K
R74
10K
R75
10K
P11
P12
P13
P14

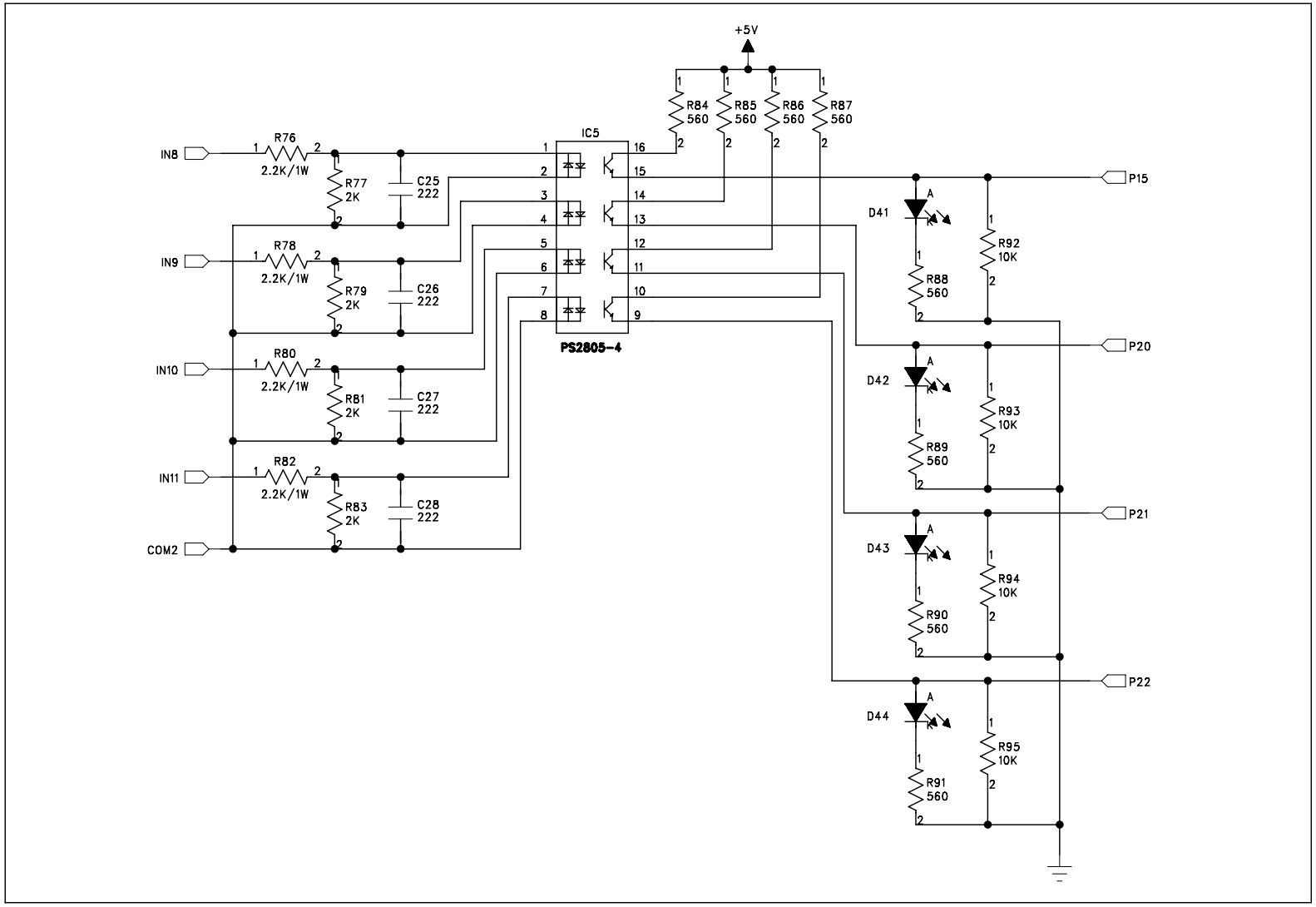
+5V
IC5
PS2805-4
IN8
IN9
IN10
IN11
COM2
R76
2.2K/1W
R77
2K
C25
222
R78
2.2K/1W
R79
2K
C26
222
R80
2.2K/1W
R81
2K
C27
222
R82
2.2K/1W
R83
2K
C28
222
R84
560
R85
560
R86
560
R87
560
D41
D42
D43
D44
R88
560
R89
560
R90
560
R91
560
R92
10K
R93
10K
R94
10K
R95
10K
P15
P20
P21
P22

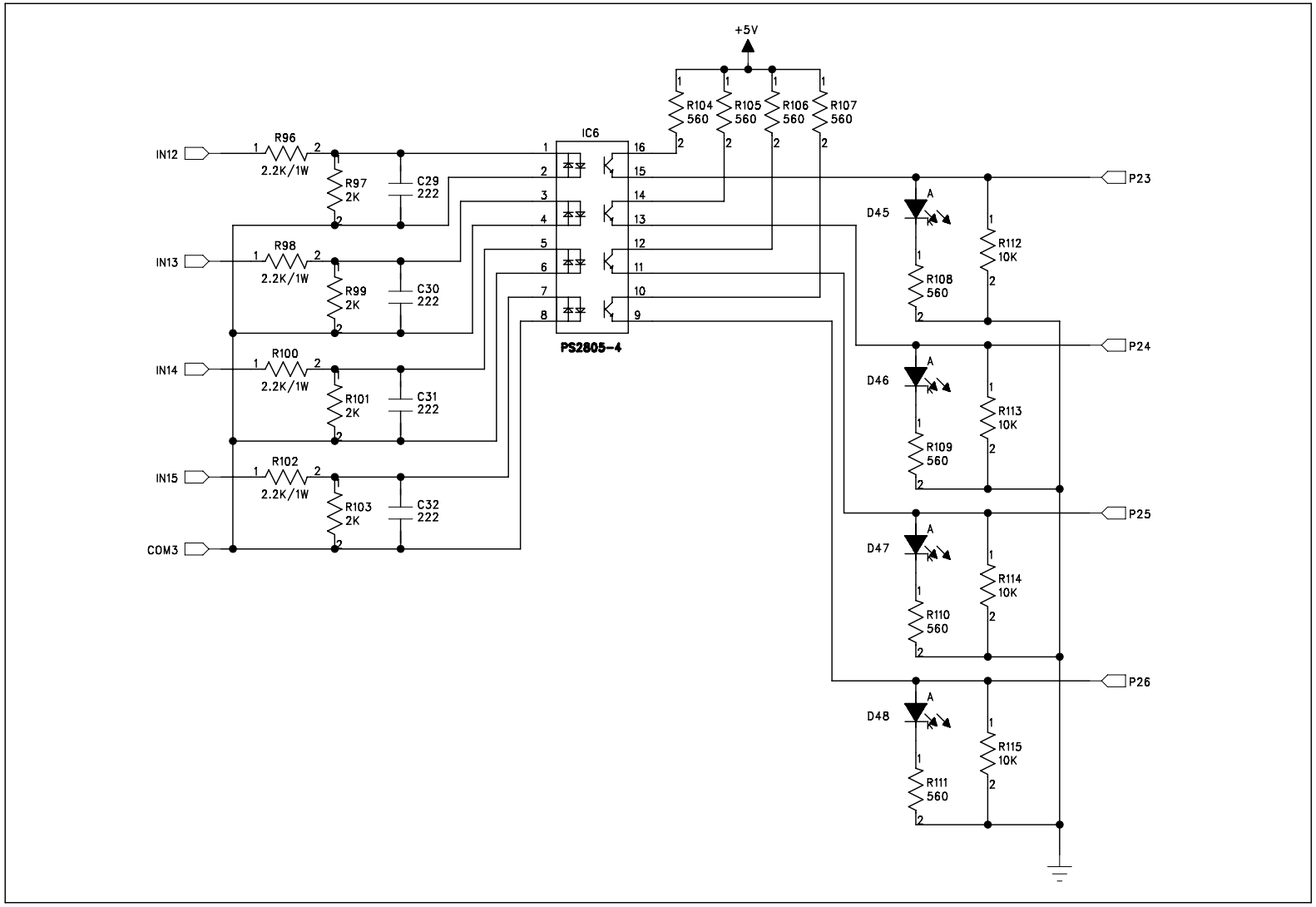
+5V
IC6
PS2805-4
IN12
IN13
IN14
IN15
COM3
R96
R97
R98
R99
R100
R101
R102
R103
2.2K/1W
2K
C29
C30
C31
C32
222
R104
R105
R106
R107
560
D45
D46
D47
D48
R108
R109
R110
R111
R112
R113
R114
R115
10K
P23
P24
P25
P26

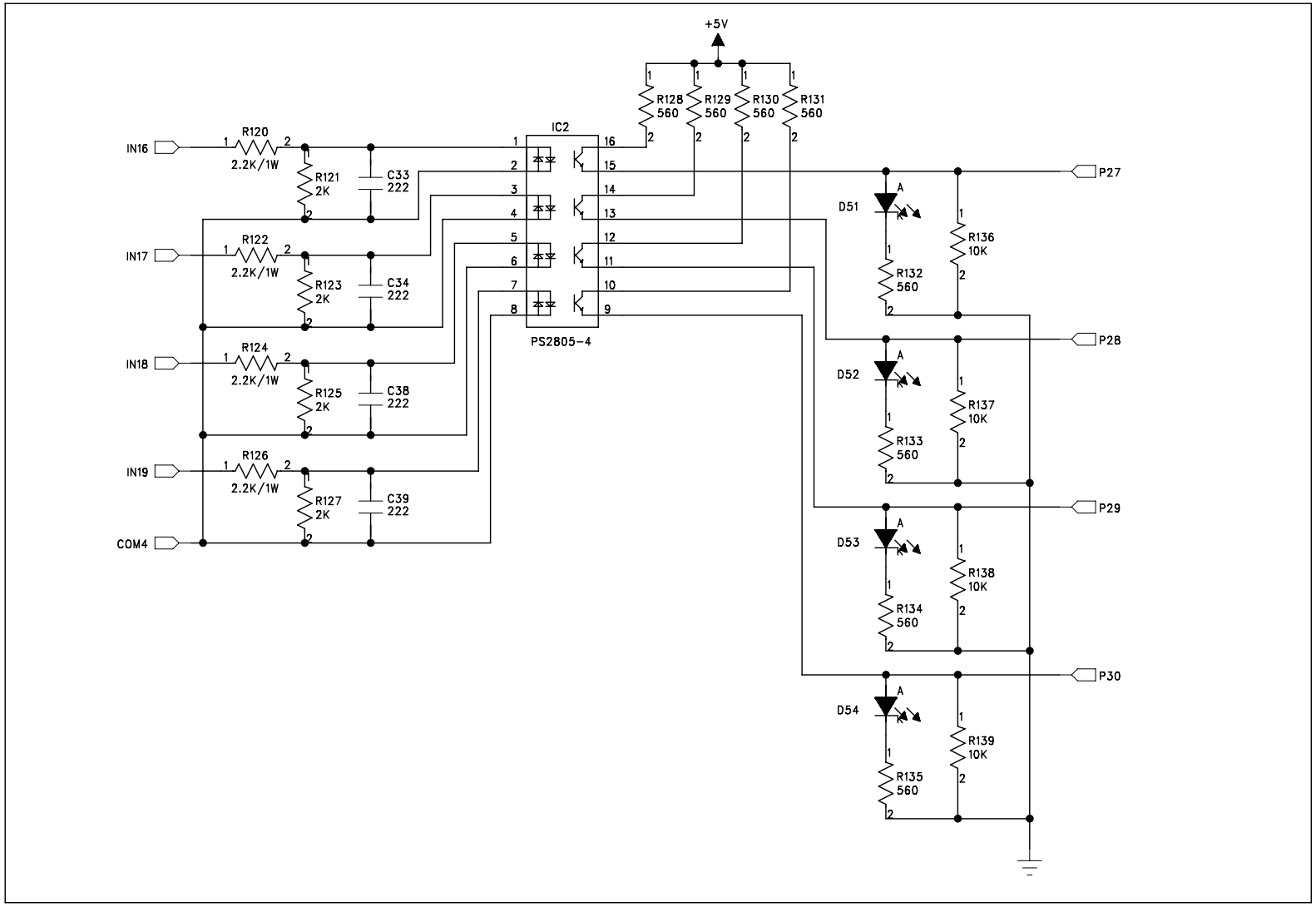
+5V
IC2
PS2805-4
IN16
IN17
IN18
IN19
COM4
R120
R122
R124
R126
2.2K/1W
R121
R123
R125
R127
2K
C33
C34
C38
C39
222
R128
R129
R130
R131
560
D51
D52
D53
D54
R132
R133
R134
R135
R136
R137
R138
R139
10K
P27
P28
P29
P30

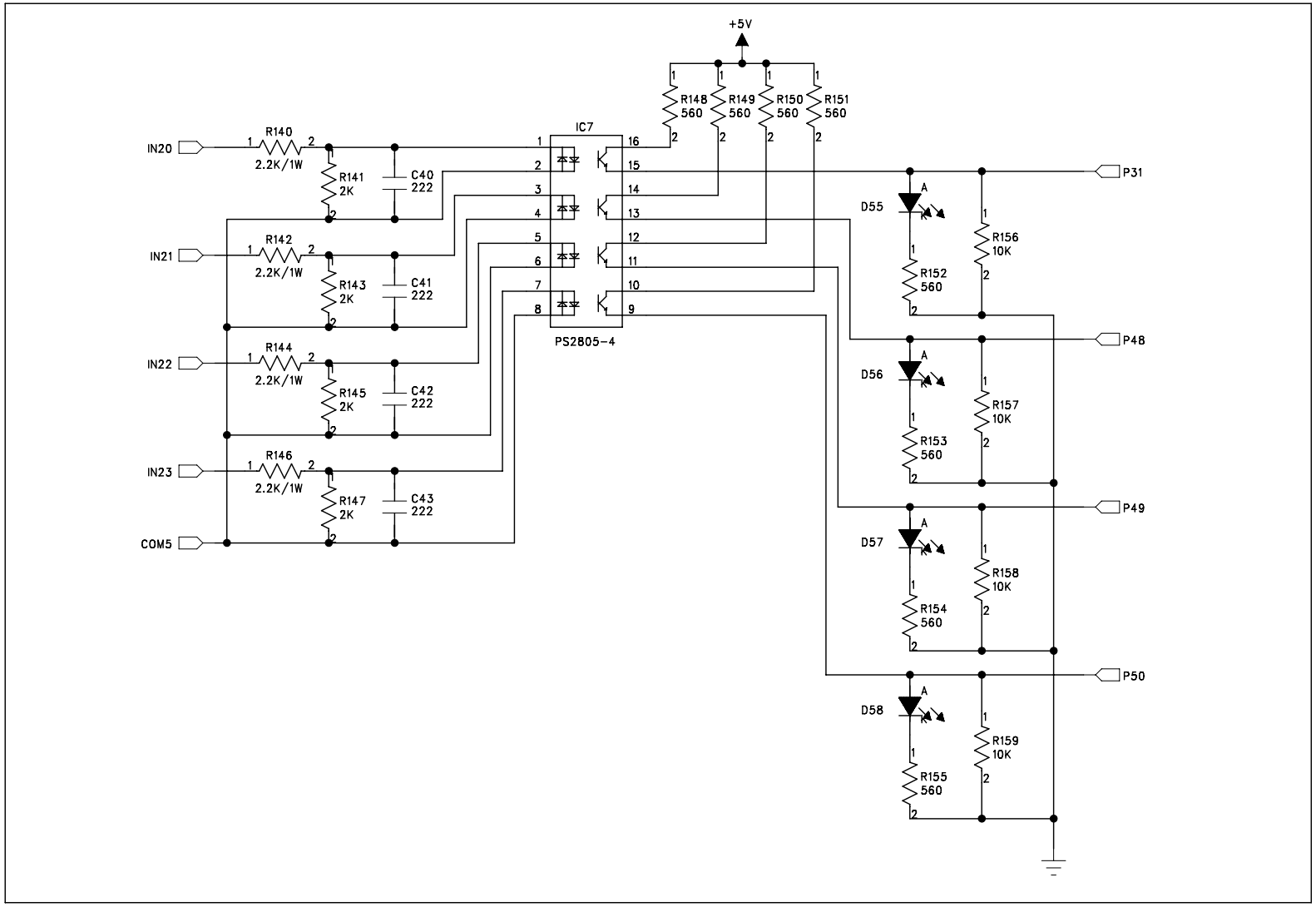
+5V
IN20
IN21
IN22
IN23
COM5
R140
2.2K/1W
R141
2K
C40
222
R142
2.2K/1W
R143
2K
C41
222
R144
2.2K/1W
R145
2K
C42
222
R146
2.2K/1W
R147
2K
C43
222
IC7
PS2805-4
R148
560
R149
560
R150
560
R151
560
D55
D56
D57
D58
R152
560
R153
560
R154
560
R155
560
R156
10K
R157
10K
R158
10K
R159
10K
P31
P48
P49
P50

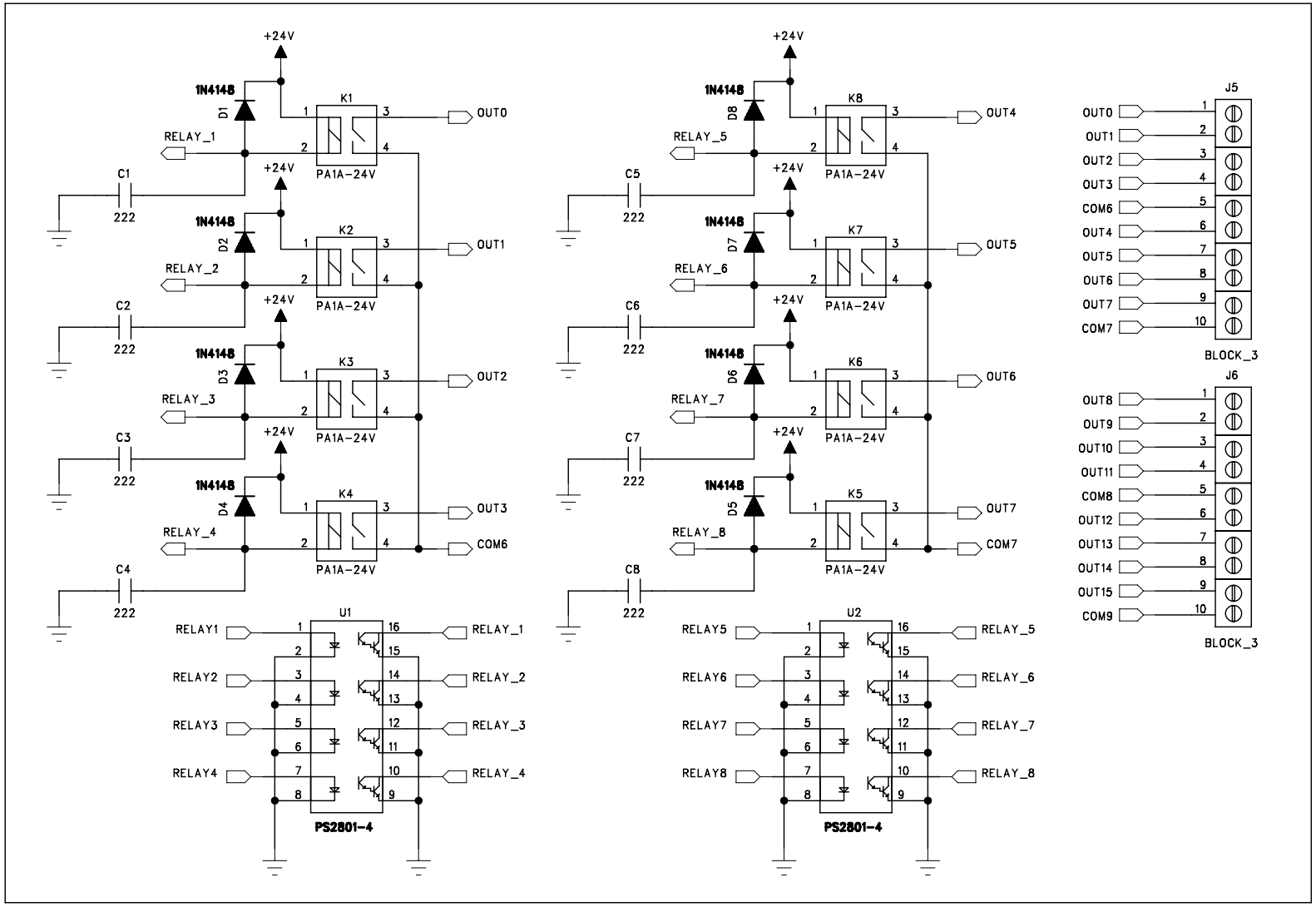
+24V
1N4148
D1
D2
D3
D4
D5
D6
D7
D8
K1
K2
K3
K4
K5
K6
K7
K8
PA1A-24V
RELAY_1
RELAY_2
RELAY_3
RELAY_4
RELAY_5
RELAY_6
RELAY_7
RELAY_8
C1
C2
C3
C4
C5
C6
C7
C8
222
OUT0
OUT1
OUT2
OUT3
COM6
OUT4
OUT5
OUT6
OUT7
COM7
U1
U2
RELAY1
RELAY2
RELAY3
RELAY4
RELAY5
RELAY6
RELAY7
RELAY8
PS2801-4
J5
J6
OUT8
OUT9
OUT10
OUT11
COM8
OUT12
OUT13
OUT14
OUT15
COM9
BLOCK_3

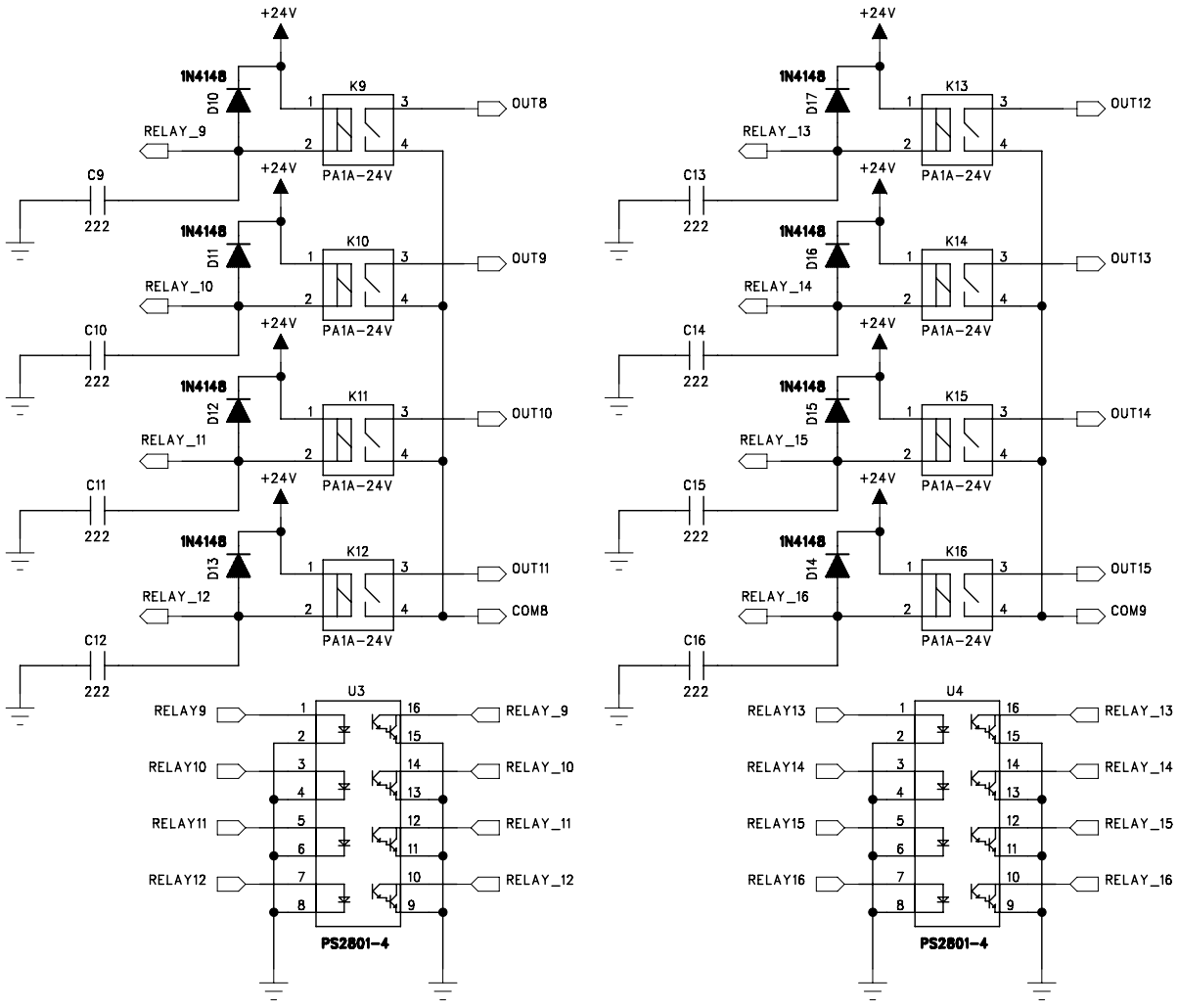
+24V
1N4148
D10
K9
PA1A-24V
OUT8
RELAY_9
C9
222
D11
K10
OUT9
RELAY_10
C10
D12
K11
OUT10
RELAY_11
C11
D13
K12
OUT11
COM8
RELAY_12
C12
U3
RELAY9
RELAY10
RELAY11
RELAY12
PS2801-4
D17
K13
OUT12
RELAY_13
C13
D16
K14
OUT13
RELAY_14
C14
D15
K15
OUT14
RELAY_15
C15
D14
K16
OUT15
COM9
RELAY_16
C16
U4
RELAY13
RELAY14
RELAY15
RELAY16

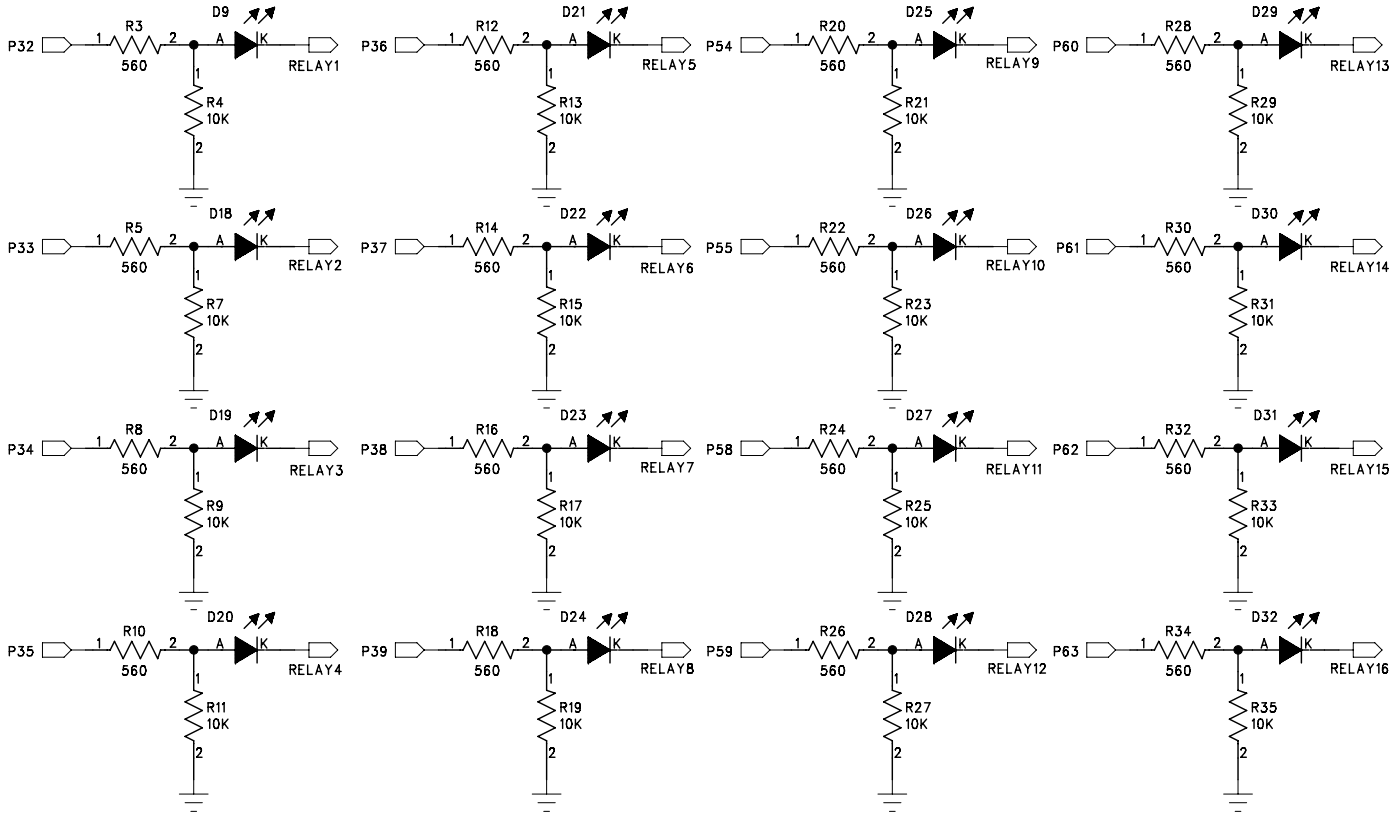
P32
R3
560
D9
RELAY1
R4
10K
P33
R5
560
D18
RELAY2
R7
10K
P34
R8
560
D19
RELAY3
R9
10K
P35
R10
560
D20
RELAY4
R11
10K
P36
R12
560
D21
RELAY5
R13
10K
P37
R14
560
D22
RELAY6
R15
10K
P38
R16
560
D23
RELAY7
R17
10K
P39
R18
560
D24
RELAY8
R19
10K
P54
R20
560
D25
RELAY9
R21
10K
P55
R22
560
D26
RELAY10
R23
10K
P58
R24
560
D27
RELAY11
R25
10K
P59
R26
560
D28
RELAY12
R27
10K
P60
R28
560
D29
RELAY13
R29
10K
P61
R30
560
D30
RELAY14
R31
10K
P62
R32
560
D31
RELAY15
R33
10K
P63
R34
560
D32
RELAY16
R35
10K

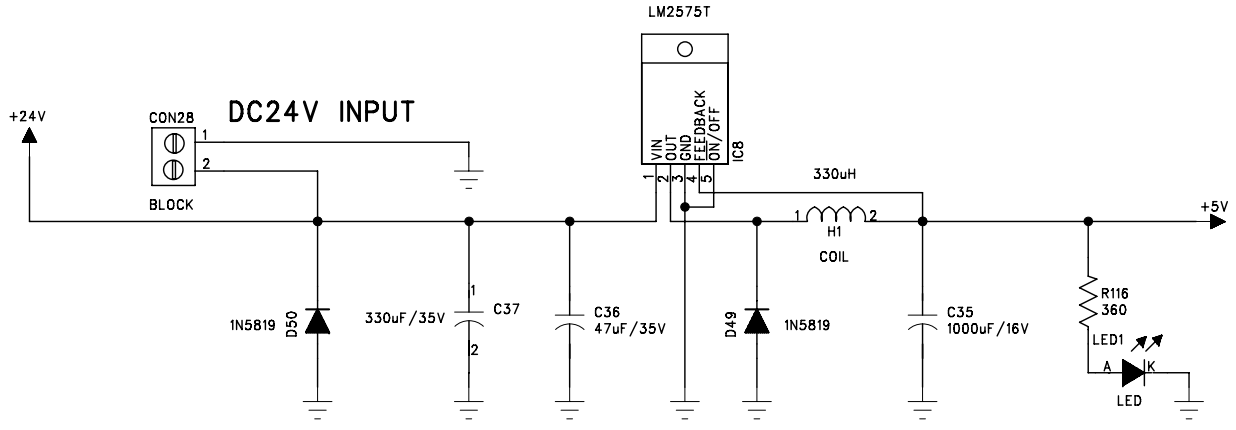
DC24V INPUT
+24V
CON28
BLOCK
1
2
LM2575T
VIN
OUT
GND
FEEDBACK
ON/OFF
IC8
330uH
H1
COIL
+5V
1N5819
D50
330uF/35V
C37
C36
47uF/35V
D49
1N5819
C35
1000uF/16V
R116
360
LED1
A
K
LED