## POWER

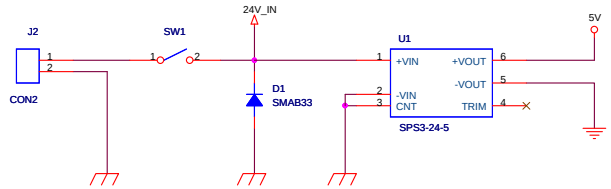


## INPUT

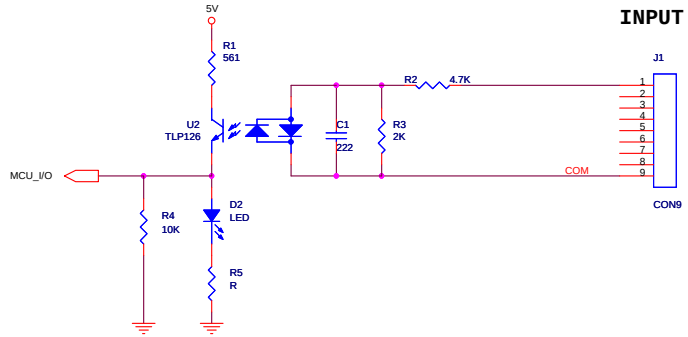


## A/D INPUT

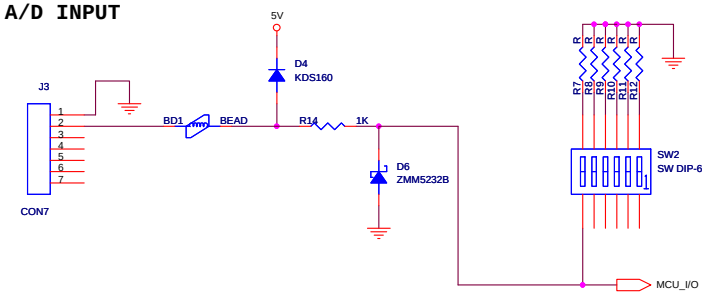


## OUTPUT

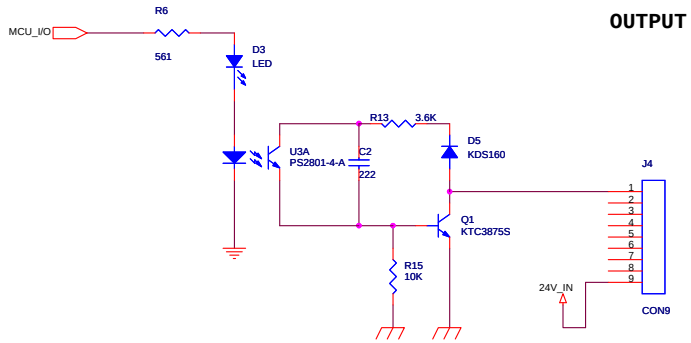


## CuNET

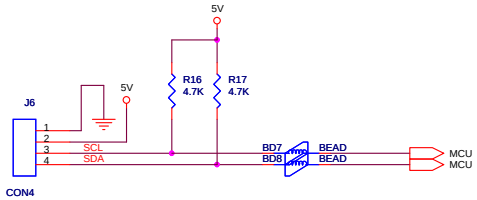


## HIGH COUNT

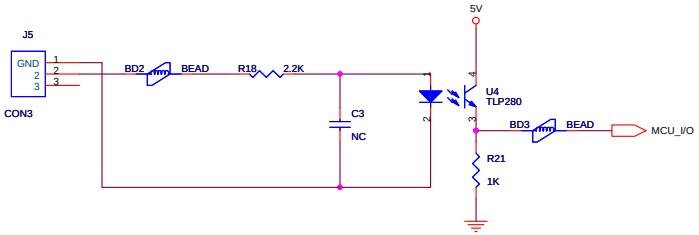


## PWM

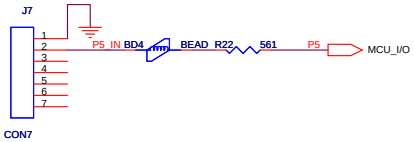


## RS232 Down Load

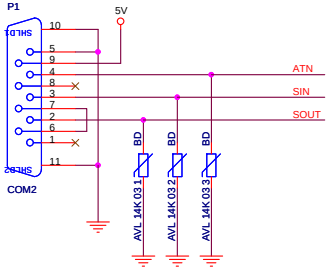

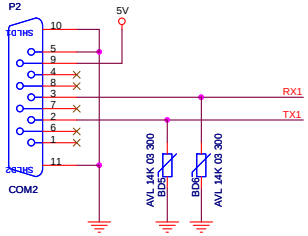
## CH1 RS232